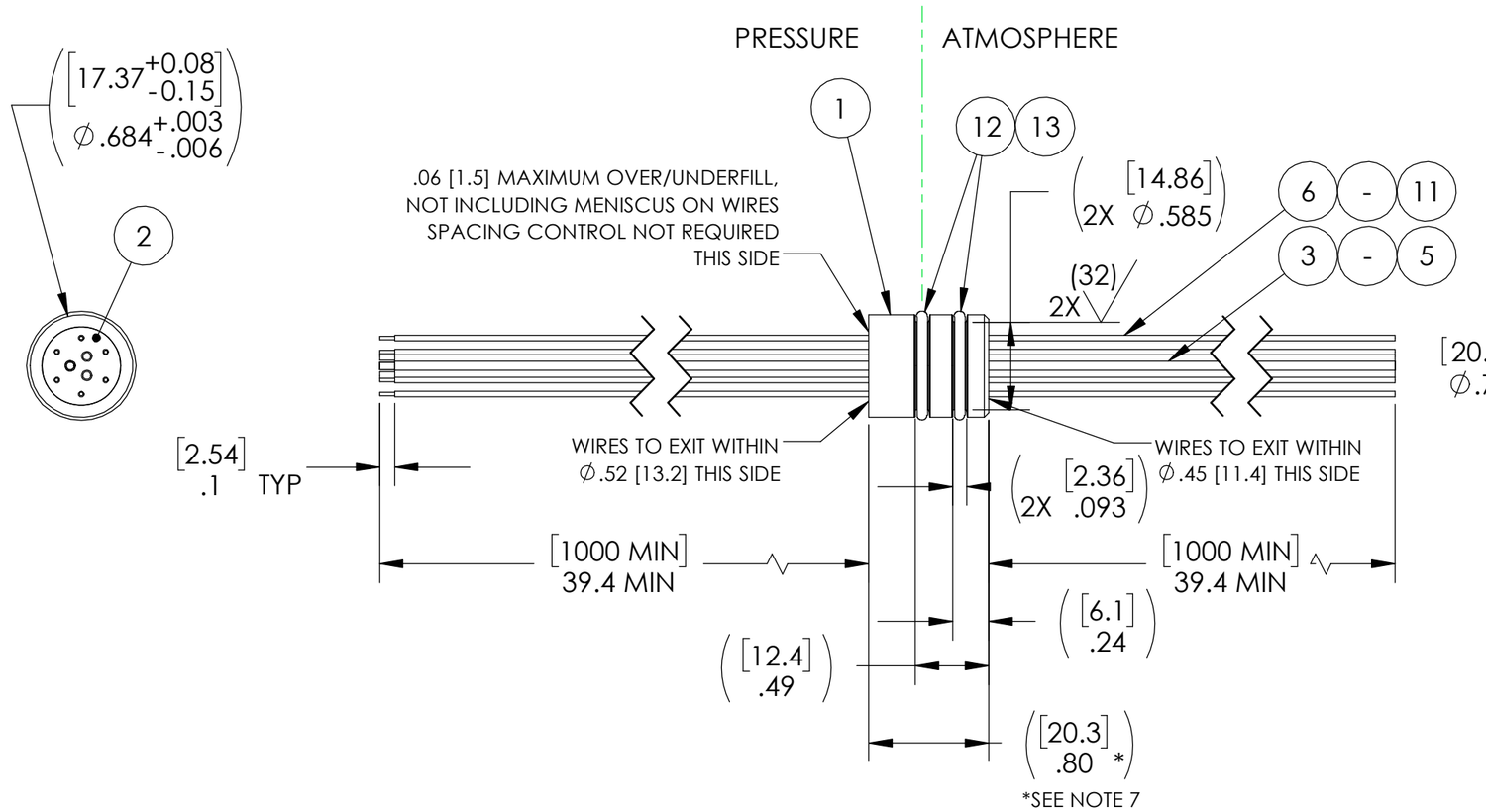

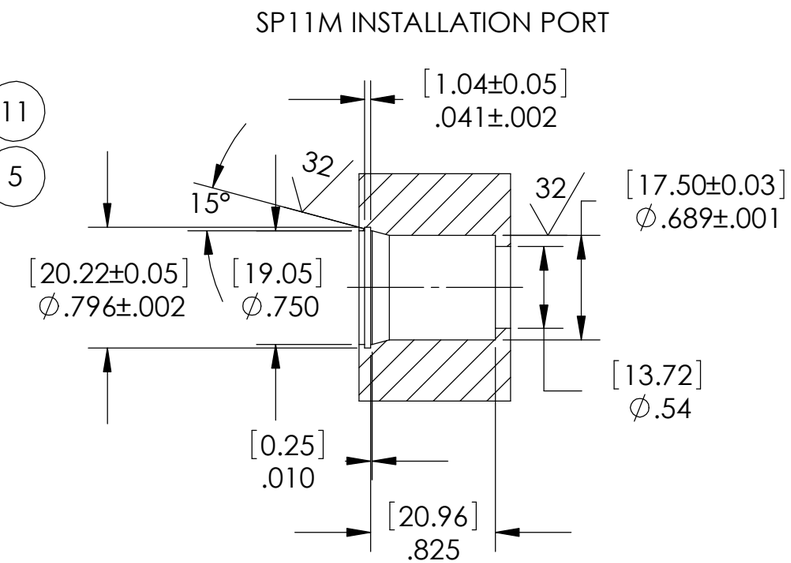

NOTES:
1. LEAK TEST: 1100 PSI NITROGEN, NO BUBBLES 30 SECONDS MINIMUM. A GREEN PAINT DOT INDICATES THE PART HAS PASSED THE TEST.
2. HYPOT 630 VDC 500 MEGOHMS MINIMUM 0.01 SECOND MINIMUM WIRE TO WIRE
3. ALL TESTS ARE PERFORMED AT ROOM TEMPERATURE.
4. ALL PARTS MUST PASS ALL TESTS.
5. WIRE POSITIONING IS APPROXIMATE & COLOR POSITIONS ARE VARIABLE, WIRES ARE NOT REQUIRED TO BEND SHARPLY AT EPOXY SEAL SURFACE.
6. COSMETIC SURFACE VOIDS NOT ON O-RING SEALING SURFACES ARE ACCEPTABLE BASED ON THE SEAL'S DIAMETER:
   <= .5 [12.7] SEAL DIAMETER: ∅.035 [.89] MAX ALLOWED VOID SIZE
   > .5 [12.7] SEAL DIAMETER: ∅.060 [1.5] MAX ALLOWED VOID SIZE
7. DIMENSION IS OVER-ALL-LENGTH EXCLUDING OVERFILL ON ATMOSPHERE SIDE OF HOUSING.
8. REF-OPERATING TEMPERATURE RANGE -34°C TO 121°C.
9. REF-PARTS ARE DEFLASHED ON PARTING LINE +0.005 [0.13] MAXIMUM.
10. DIMENSIONS ARE INCHES [millimeters].
11. PAVE-SEAL CAN BE A BI-DIRECTIONAL HERMETIC SEAL FOR VACUUM AND MOST PRESSURES. FOR PRESSURES ABOVE 150 PSI (10 BAR), CHECK WITH SALES ENGINEERING.

ITEM	QTY	PART NUMBER	DESCRIPTION
13	A/R	PARKER O-LUBE	LUBRICANT O-RING BARIUM-BASED
12	2	-015 NITRILE	O-RING -015 NITRILE 75
11	1	TZ24 VIO M/16	WIRE 24AWG TEFZEL M22759/16
10	1	TZ24 GRY M/16	WIRE 24AWG TEFZEL M22759/16
9	1	TZ24 GRN M/16	WIRE 24AWG TEFZEL M22759/16
8	1	TZ24 RED M/16	WIRE 24AWG TEFZEL M22759/16
7	1	TZ24 BLU M/16	WIRE 24AWG TEFZEL M22759/16
6	1	TZ24 BLK M/16	WIRE 24AWG TEFZEL M22759/16
5	1	TZ16 WHITE	WIRE 16TZ M22759/44 .007 19/#29
4	1	TZ16 RED	WIRE 16TZ M22759/44 .007 19/#29
3	1	TZ16 BLK	WIRE 16TZ M22759/44 .007 19/#29
2	A/R	PAVE-Seal 150	EPOXY BLACK
1	1	1374M	HOUSING SP11M-E

ALL DIMENSIONS AND TOLERANCES APPLY TO FINISHED PART IN INCHES.
ALLOWABLE TOLERANCES UNLESS SPECIFIED OTHERWISE: NONE ±0.5
X.X DECIMAL ±0.1 X.XX DECIMAL ±0.02 X.XXX DECIMAL ±0.005
ANGLES ±1 DEGREE SURFACE FINISH 128 microinch RMS

PAVE technology co.
2751 Thunderhawk Court
Dayton, OH 45414-3445
U.S.A.
tel (937) 890-1100
fax (937) 8905165
www.pavetechnologyco.com

DESCRIPTION: SP11M-E-150-6/3-TZ24/16-1-1m

PART NUMBER: 5996

MATERIAL: NOTED

REVISION LEVEL: -

PROJECTION