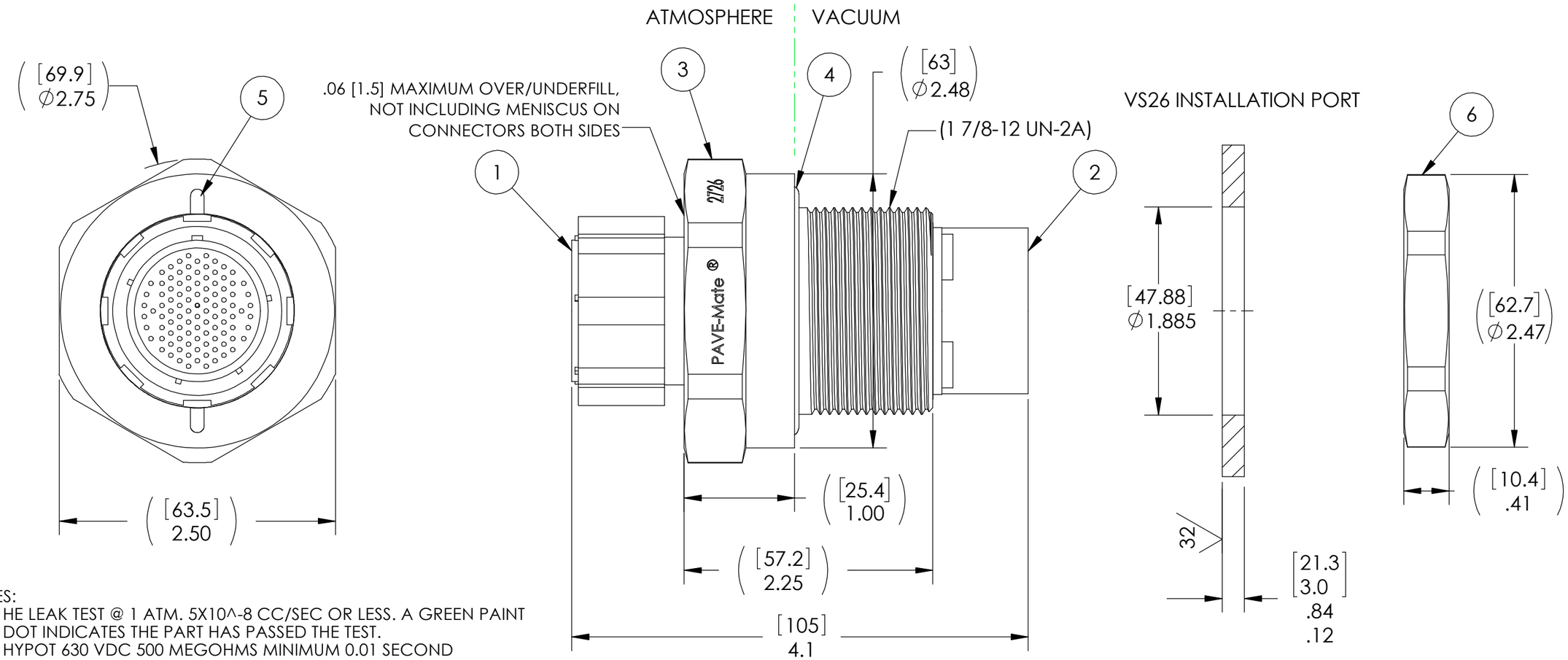

NOTES:

1. HE LEAK TEST @ 1 ATM. 5X10^-8 CC/SEC OR LESS. A GREEN PAINT DOT INDICATES THE PART HAS PASSED THE TEST.
2. HYPOT 630 VDC 500 MEGOHMS MINIMUM 0.01 SECOND MINIMUM PIN TO PIN AND HOUSING WITH MATING CONNECTORS.
3. CONTINUITY TEST <0.5 WITH MATING CONNECTORS.
4. ALL TESTS ARE PERFORMED AT ROOM TEMPERATURE.
5. ALL PARTS MUST PASS ALL TESTS.
6. REF-OPERATING TEMPERATURE RANGE -20˚C TO 125˚C.
7. SHELLS FOR ITEMS 1 AND 2, AND HOUSING (ITEM 3) TO HAVE ELECTRICAL CONTINUITY.
8. DIMENSIONS ARE INCHES [millimeters].
9. PAVE-SEAL CAN BE A BI-DIRECTIONAL HERMETIC SEAL FOR VACUUM AND MOST PRESSURES. FOR PRESSURES ABOVE 150 PSI (10 BAR), CHECK WITH SALES ENGINEERING.
10. ALCOHOL OR FOMBLIN YVAC 3 MAY BE USED TO LUBRICATE O-RINGS FOR VACUUM HELIUM LEAK TESTING.
11. PAVE 2726-1 ONLY INCLUDES ANOTHER OF ITEMS 1 AND 2 LOOSE AS MATING CONNECTORS WITH LOOSE CRIMP CONTACTS.
12. COSMETIC SURFACE VOIDS NOT ON O-RING SEALING SURFACES ARE ACCEPTABLE BASED ON THE SEAL'S DIAMETER:
    <= .5 [12.7] SEAL DIAMETER: ∅.035 [.89] MAX ALLOWED VOID SIZE
    > .5 [12.7] SEAL DIAMETER: ∅.060 [1.5] MAX ALLOWED VOID SIZE

PAVE#	ITEM 1	ITEM 2
2726	D3899926FH35PN	D3899920FH35SN
2726A	D3899926FH35PA	D3899920FH35SA
2726B	D3899926FH35PB	D3899920FH35SB
2726C	D3899926FH35PC	D3899920FH35SC
2726D	D3899926FH35PD	D3899920FH35SD
2726E	D3899926FH35PE	D3899920FH35SE

ITEM	QTY	PART NUMBER	DESCRIPTION
6	1	0185	NUT VS26-SS
5	A/R	PAVE-Seal 150	EPOXY BLACK
4	1	-226 VITON	O-RING -226 VITON 75
3	1	3664	HOUSING VS26-SS
2	1 SEE NOTE 11	SEE TABLE	RCPT 100 #22 SOCKETS 999 SERIES III
1	1 SEE NOTE 11	SEE TABLE	PLUG 100 #22D PINS 999 SERIES III

ALL DIMENSIONS AND TOLERANCES APPLY TO FINISHED PART IN INCHES.
ALLOWABLE TOLERANCES UNLESS SPECIFIED OTHERWISE: NONE ±0.5
X.X DECIMAL ±0.1 X.XX DECIMAL ±0.02 X.XXX DECIMAL ±0.005
ANGLES ±1 DEGREE SURFACE FINISH 128 microinch RMS

PAVE technology co.
2751 Thunderhawk Court
Dayton, OH 45414-3445
U.S.A.
tel (937) 890-1100
fax (937) 8905165
www.pavetechnologyco.com

DESCRIPTION: VS26-SS-150-100-22-99926P/20S

PART NUMBER: 2726* (*SEE TABLE & NOTE 11)

MATERIAL: NOTED

REVISION LEVEL: C

PROJECTION