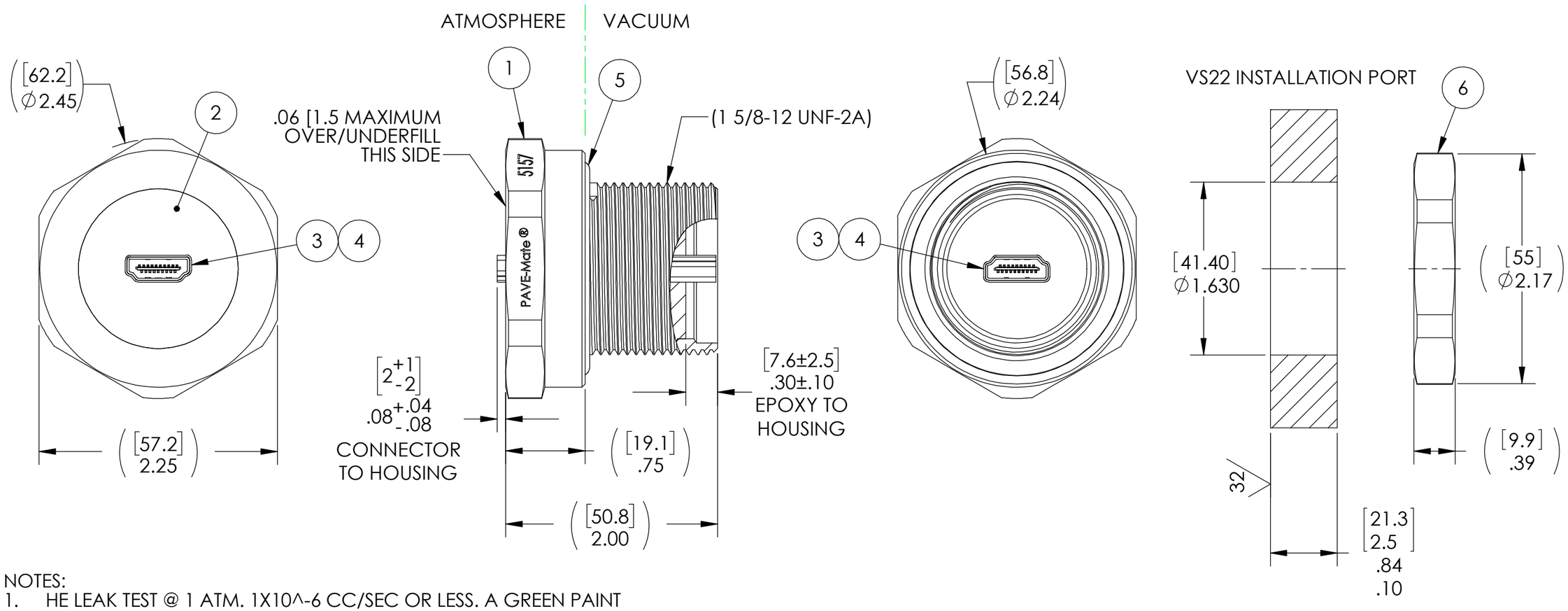

NOTES:

1. HE LEAK TEST @ 1 ATM. 1X10^-6 CC/SEC OR LESS. A GREEN PAINT DOT ON THE ATMOSPHERE SIDE INDICATES THE PART HAS PASSED THE TEST.
2. HYPOT 100 VDC 10 MEGOHMS MINIMUM 0.01 SECOND MINIMUM PIN TO PIN AND HOUSING WITH MATING CONNECTORS.
3. ALCOHOL OR FOMBLIN YVAC 3 MAY BE USED TO LUBRICATE O-RINGS FOR VACUUM HELIUM LEAK TESTING.
4. ALL TESTS ARE PERFORMED AT ROOM TEMPERATURE.
5. ALL PARTS MUST PASS ALL TESTS.
6. COSMETIC SURFACE VOIDS NOT ON O-RING SEALING SURFACES ARE ACCEPTABLE BASED ON THE SEAL'S DIAMETER:
   <= .5 [12.7] SEAL DIAMETER: ∅.035 [.89] MAX ALLOWED VOID SIZE
   > .5 [12.7] SEAL DIAMETER: ∅.060 [1.5] MAX ALLOWED VOID SIZE
7. REF-OPERATING TEMPERATURE RANGE -20˚C TO 80˚C.
8. DIMENSIONS ARE INCHES [millimeters].
9. PAVE-SEAL CAN BE A BI-DIRECTIONAL HERMETIC SEAL FOR VACUUM AND MOST PRESSURES. FOR PRESSURES ABOVE 150 PSI (10 BAR), CHECK WITH SALES ENGINEERING.

ITEM	QTY	PART NUMBER	DESCRIPTION
6	1	0199	NUT VS22-SS (316SS)
5	1	-224 VITON	O-RING -224 VITON 75
4	A/R	FIT-221L 1/"2	TUBING SHRINK LSZH POLYOLEFIN BLACK
3	1	HDMI-AF-AF	CONNECTOR HDMI TYPE A FEMALE (2X) MOUNTED TO PCB
2	A/R	PAVE-Seal 150	EPOXY BLACK
1	1	0189/304SS	HOUSING VS22-SS

ALL DIMENSIONS AND TOLERANCES APPLY TO FINISHED PART IN INCHES.
ALLOWABLE TOLERANCES UNLESS SPECIFIED OTHERWISE: NONE ±0.5
X.X DECIMAL ±0.1 X.XX DECIMAL ±0.02 X.XXX DECIMAL ±0.005
ANGLES ±1 DEGREE SURFACE FINISH 128 microinch RMS

PAVE technology co.
2751 Thunderhawk Court
Dayton, OH 45414-3445
U.S.A.
tel (937) 890-1100
fax (937) 8905165
www.pavetechnologyco.com

DESCRIPTION: VS22-SS-150-1-HDMIAfemale-HDMIAfemale

PART NUMBER: 5157

MATERIAL: NOTED

REVISION LEVEL: B

PROJECTION